808nm Infrared Laser Diode

ADL-80Q41NZ

xx-xx-xxxx-xxx Rev.00

808nm 4W

Features

Highly reliable
Higher power
High efficiency

Applications

Pumping of solid-state lasers and fiber lasers

Measuring, scientific and medical systems

Printing, defense and security

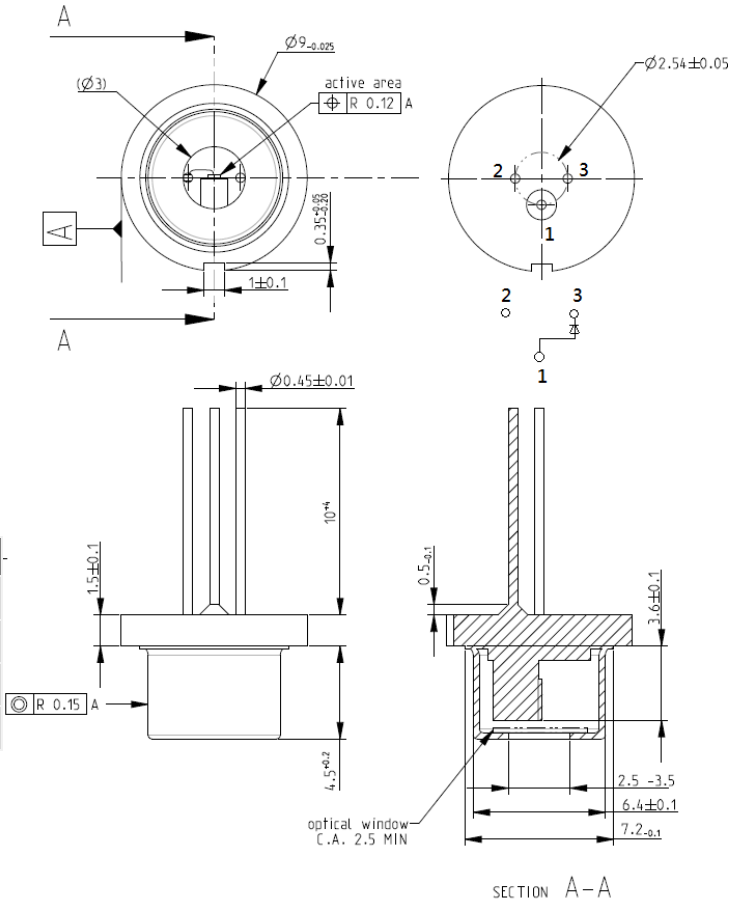

Absolute Maximum Ratings

Parameter	Symbol	Condition	Rating	Unit
Light Output Power	P_O	Pulse	4	W
Reverse Voltage(LD)	V_{RL}	-	2	V
Case Temperature	TC	-	-40~85	℃
Storage Temperature	TS	-	-40~85	℃

*Case temperature equal to ambience temperature.

Electrical and Optical Characteristics(Tc=25℃)

Parameter	Symbol	Min.	Typ.	Max.	Unit	Condition
Peak Wavelength	λ		808		nm	Po=4W
Threshold Current	I_{th}		0.42	0.5	A	
Operating Current	I_{op}		3.85	4.2	A	Po=4W
Operating Voltage	V_{op}		2.25	3	V	Po=4W
Differential efficiency	η	0.9	1.1		W/A	Po=3-4W
Parallel divergence angle	θ//	7	8.5	12	deg.	Po=4W
Perpendicular divergence angle	θ⊥	25	29	35	deg.	
Parallel FFP deviation angle	Δ θ//	-3	0	3	deg	
Perpendicular FFP deviation angle	Δ θ⊥	-3	0	3	deg	
Emission point accuracy	Δ xΔ yΔ z	-80	0	80	um	

* The specification is measured under pulse operation.

● Precautions

* Do not operate the device above maximum ratings even short period of time. Doing so may cause unexpected and permanent damage to the device.
* Take precautions to avoid electrostatic discharge and/or momentary power spikes. A change in the characteristics of the laser or premature failure may result.
* Proper heat sinking of the device assures stability and lifetime. Always ensure that maximum operating temperatures are not exceeded.
* Observing visible or invisible laser beams with the human eye directly, or indirectly, can cause permanent damage. Use a camera to observe the laser.
* No laser device should be used in any application or situation where life or property is at risk in event of device failure.
* Specifications are subject to change without notice. Ensure that you have the latest specification by contacting us prior to purchase or use of the product.

ARIMA LASERS CORP.
PHONE: 886-3-4699800 | FAX: 886-3-4699600
E-MAIL: Ldsales@arimalasers.com | www.arimalasers.com

For reference only. Contents above are subject to change without notice.

808nm 4W

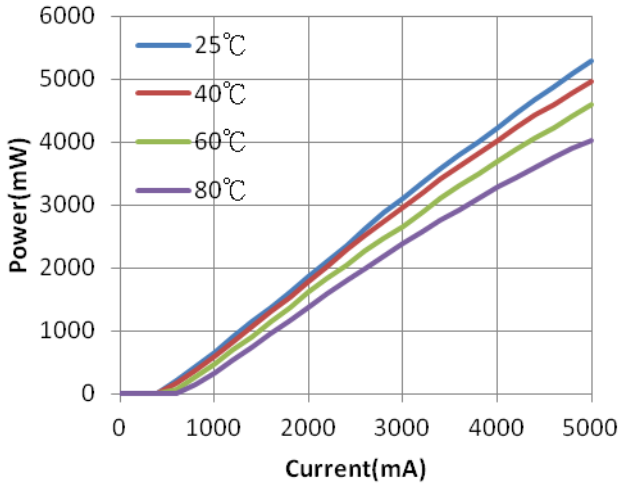

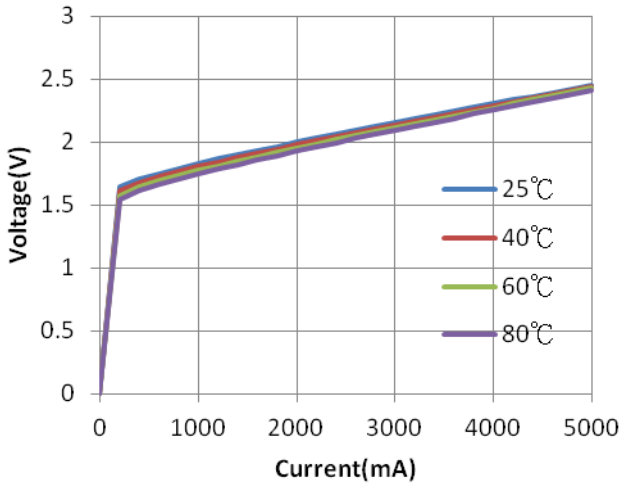

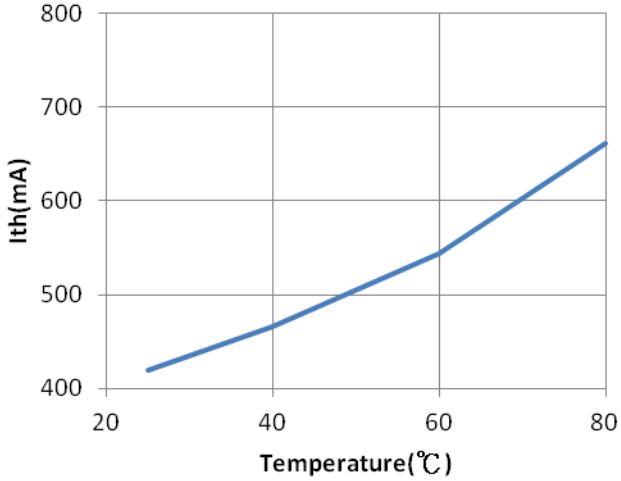

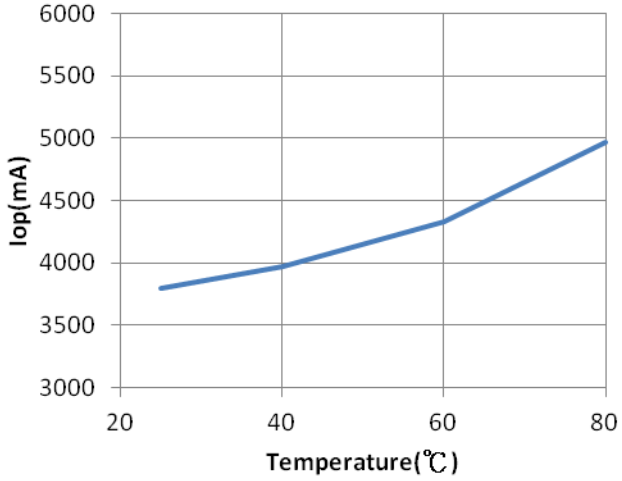

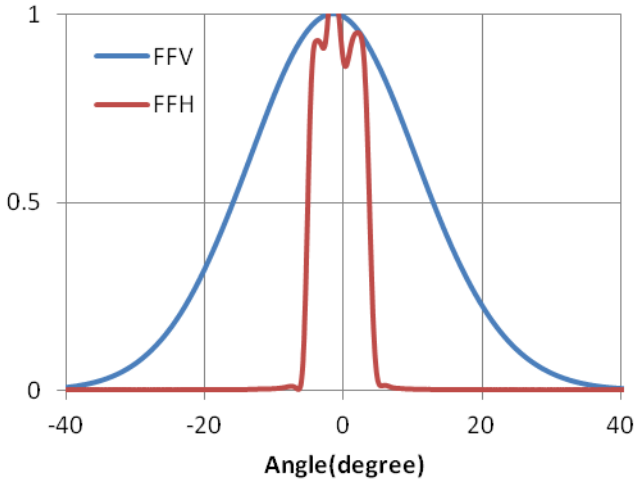

ARIMA LASERS CORP.
PHONE: 886-3-4699800 | FAX: 886-3-4699600
E-MAIL: Ldsales@arimalasers.com | www.arimalasers.com

For reference only. Contents above are subject to change without notice.